Model 92 - Hand Wheel Adjustable Forks Pallet Lifter

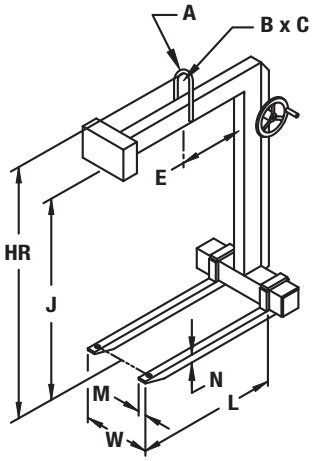

PRODUCT FEATURES:

- Hand wheel adjustable forks for ease of adjustment.
- Converts overhead crane to lift truck.
- Handles multiple pallet sizes.
- Complies with ASME standards.

SPECIFICATIONS

Model Number	Capacity (tons)	Dimensions (inches)											Weight (lbs.)
		Forks			W		E	Bail			J*	HR	
		L	M	N	Min.	Max.		A	B	C			
92-1-36	1	36	2	2	16	38	18	1	3	5	48	58	890
92-1-42	1	42	2	2	16	38	21	1	3	5	48	58-1/2	800
92-1-48	1	48	2	2	16	38	24	1	3	5	48	58-1/2	1051
92-1 1/2-36	1-1/2	36	3	2	22-1/2	38	18	1	3	5	48	58	1000
92-1 1/2-42	1-1/2	42	3	2	22-1/2	38	21	1	3	5	48	60	1055
92-1 1/2-48	1-1/2	48	3	2	22-1/2	38	24	1	3	5	48	60	1130
92-2-36	2	36	3	2	22-1/2	38	18	1	3	5	48	60	1105
92-2-42	2	42	4	2	23	38	21	1	3	5	48	60	1351
92-2-48	2	48	4	2	24	38	24	1	3	5	48	59-1/2	1360
92-3-42	3	42	5	2	23	38	21	1-1/2	4	7	48	61-1/2	1465
92-3-48	3	48	4-1/2	2-1/2	24	38	24	1-1/2	4	7	48	63-1/2	1600
92-3-54	3	54	4-1/2	2-1/2	24	38	27	1-1/2	4	7	48	63	2130
92-4-48	4	48	5	3	28-1/2	38	24	1-1/2	4	7	48	62-1/2	2035
92-4-60	4	60	5	3	28-1/2	38	30	1-1/2	4	7	60	76	2385
92-5-48	5	48	5	3	25-1/2	38	24	1-1/2	4	7	48	65	2550
92-5-60	5	60	4-1/2	2-1/2	25-1/2	38	30	1-1/2	4	7	60	79	2740

* Additional 3" - 4" clearance recommended above load for ease of loading and unloading the lifter.

Model 97 - Heavy Duty Hand Wheel Adjustable Forks Pallet Lifter

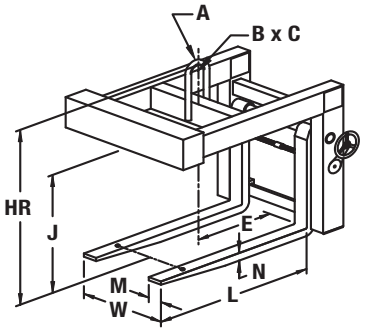

PRODUCT FEATURES:

- Hand wheel adjustable forks for ease of adjustment.
- Forged forks allow for smaller fork sizes.
- Double frame design for heavy capacities.
- Complies with ASME standards.

SPECIFICATIONS

Model Number	Capacity (tons)	Dimensions (inches)											Weight (lbs.)
		Forks			W		E	Bail			J*	HR	
		L	M	N	Min.	Max.		A	B	C			
97-7 1-2-48	7-1/2	48	6	2-1/2	20	48	24	2	5	9	48	66	2600
97-7 1/2-60	7-1/2	60	6	3	20	48	30	2	5	9	60	77-1/2	3500
97-7 1/2-72	7-1/2	72	6	3	20	48	36	2	5	9	60	80	3950
97-10-48	10	48	6	3	20	48	24	2	5	9	48	65-1/2	3150
97-10-60	10	60	6	3	20	48	30	2	5	9	60	77-1/2	3850
97-10-72	10	72	7	3	20	48	36	2	5	9	60	82	4250
97-12 1/2-48	12-1/2	48	6	3	20	48	24	2	6	12	48	82	4200
97-12 1/2-60	12-1/2	60	6	3	20	48	30	2	6	12	60	82	4950
97-12 1/2-72	12-1/2	72	7	3-1/2	20	48	36	2	6	12	60	82	5750
97-15-60	15	60	7	3-1/2	20	48	30	2	6	12	60	82	5300
97-15-72	15	72	8	3-1/2	20	48	36	2	6	12	60	82-1/2	6400

* Additional 3" - 4" clearance recommended above load for ease of loading and unloading the lifter.

WARNING

Center of hoist and bail must be in-line with the load's center of gravity.

The Caldwell Group • 800-628-4263 • www.caldwellinc.com