Model 16 - Adjustable Spreader/Lifting Beam

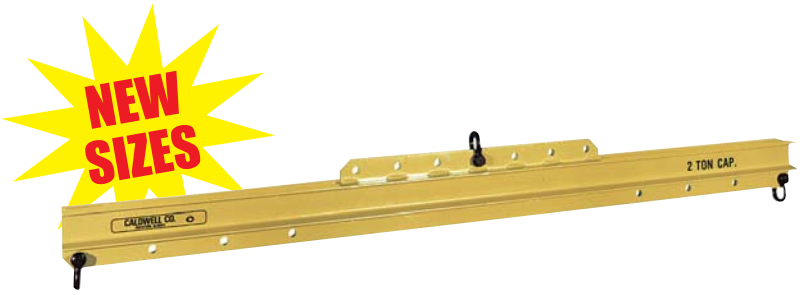

PRODUCT FEATURES:
- Adjustable lifting points.
- Handles both wide and unbalanced loads.
- Low headroom capability.
- Shackles included.
- Add chain top rigging for additional stability.
- Optional swivel hooks available.
- Optional chain top rigging available.
- Complies with ASME standards.

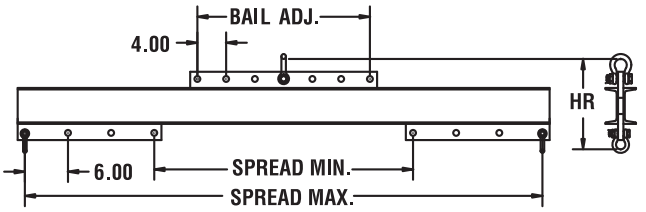

PRODUCT OPTIONS:
- **OPTION S** - Pair of swivel hooks
- **OPTION C** - Chain top rigging
- **OPTION B1** - One cross beam*
- **OPTION B2** - Two cross beams*

* Specify spreads

QUICKSHIP PROGRAM

SPECIFICATIONS

Model Number	Rated Capacity (tons)	Spread (in.)		Bail Adjustment (in.)	HR Headroom (in.)	Bolt Type Anchor Shackle (tons)		Weight (lbs.)
		Max.	Min.			Top	Bottom	
16-1/4-4	1/4	48	12	16	7.13	1.5	1.5	40
16-1/2-4	1/2	48	12	16	7.13	1.5	1.5	40
16-1/2-6	1/2	72	36	24	10.00	1.5	1.5	100
16-1/2-8	1/2	96	48	32	10.00	1.5	1.5	135
16-1/2-10	1/2	120	60	40	10.00	1.5	1.5	145
16-1-6	1	72	36	24	10.00	1.5	1.5	100
16-1-8	1	96	48	32	11.00	1.5	1.5	140
16-1-10	1	120	60	40	11.00	1.5	1.5	175
16-2-6	2	72	36	24	12.50	3.25	2	130
16-2-8	2	96	48	32	13.50	3.25	2	200
16-2-10	2	120	60	40	14.50	3.25	2	280
16-4-8	4	96	48	32	16.75	4.75	4.75	290
16-4-10	4	120	60	40	18.75	4.75	4.75	420
16-4-12	4	144	72	48	18.75	4.75	4.75	500
16-5-8	5	96	48	32	18.75	6.5	4.75	320
16-5-10	5	120	60	40	20.25	6.5	4.75	465
16-5-12	5	144	72	48	20.25	6.5	4.75	550
16-7-12	7	144	72	48	23.75	8.5	6.5	790

Operation

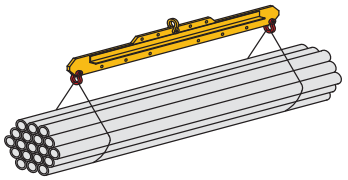

Standard
2 Point Lift

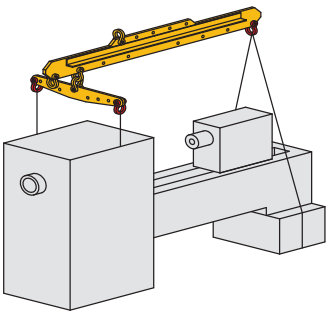

Custom
3 Point Lift

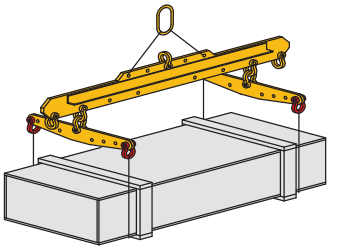

Custom
4 Point Lift